1 Allée des Bouleaux -F-95110 SANNOIS
+33 (0)1 39 98 55 00
info@restagraf.com

PLASTIC NUT Ø 5 mm

Item code

12681

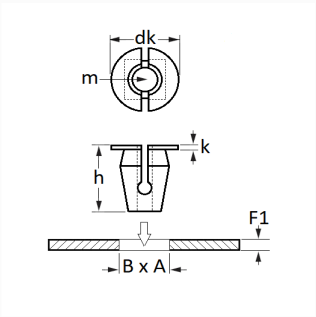

Technical informations	
dk	12 mm
k	1 mm
h	15 mm
m	Vis Matériaux Tendres Ø 5 mm
B	7 mm
A	7 mm
F1	0.8 → 4 mm

Materials
POLYAMIDE 6

Manufacturer correspondence*	
B.M.W	07146976114

* Non contractual information given as indication